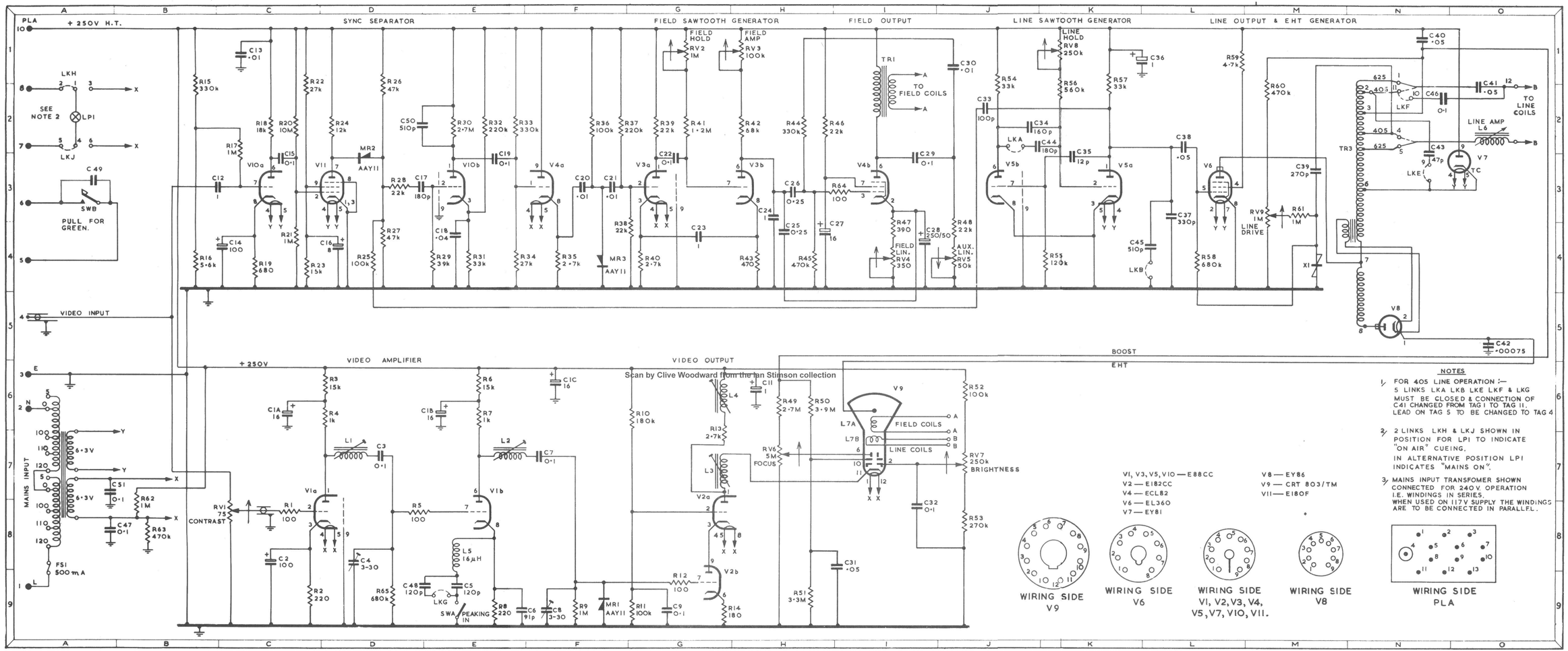

Scan by Clive Woodward from the Ian Stimson collection

www.tvcameramuseum.org

CIRCUIT
VIEWFINDER
WZ.30385/D Sh.1 Iss.4

FIG.101