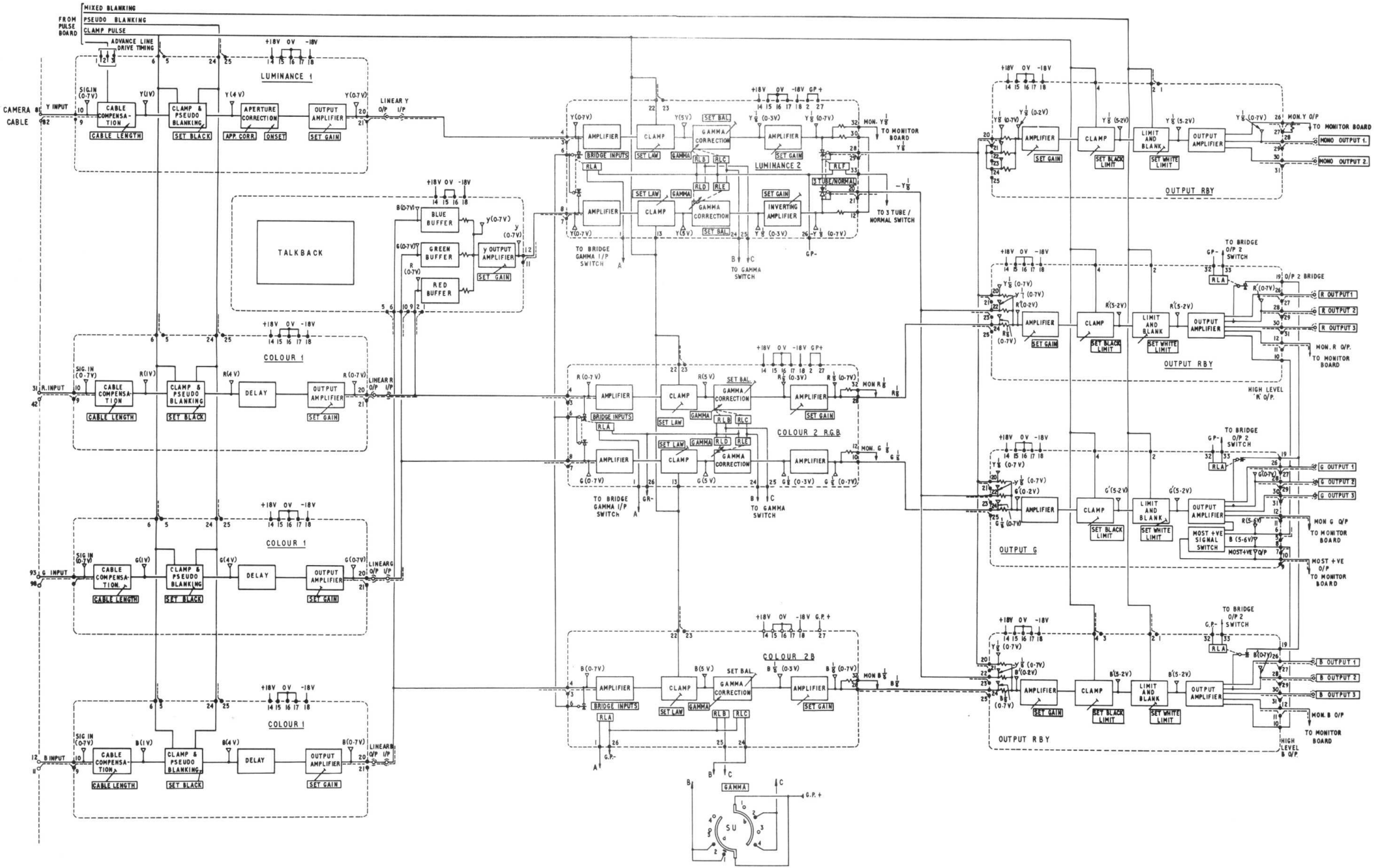

TL.1646

CCU VIDEO AMPLIFIER SCHEMATIC

www.tvcameramuseum.org

FIG.46.